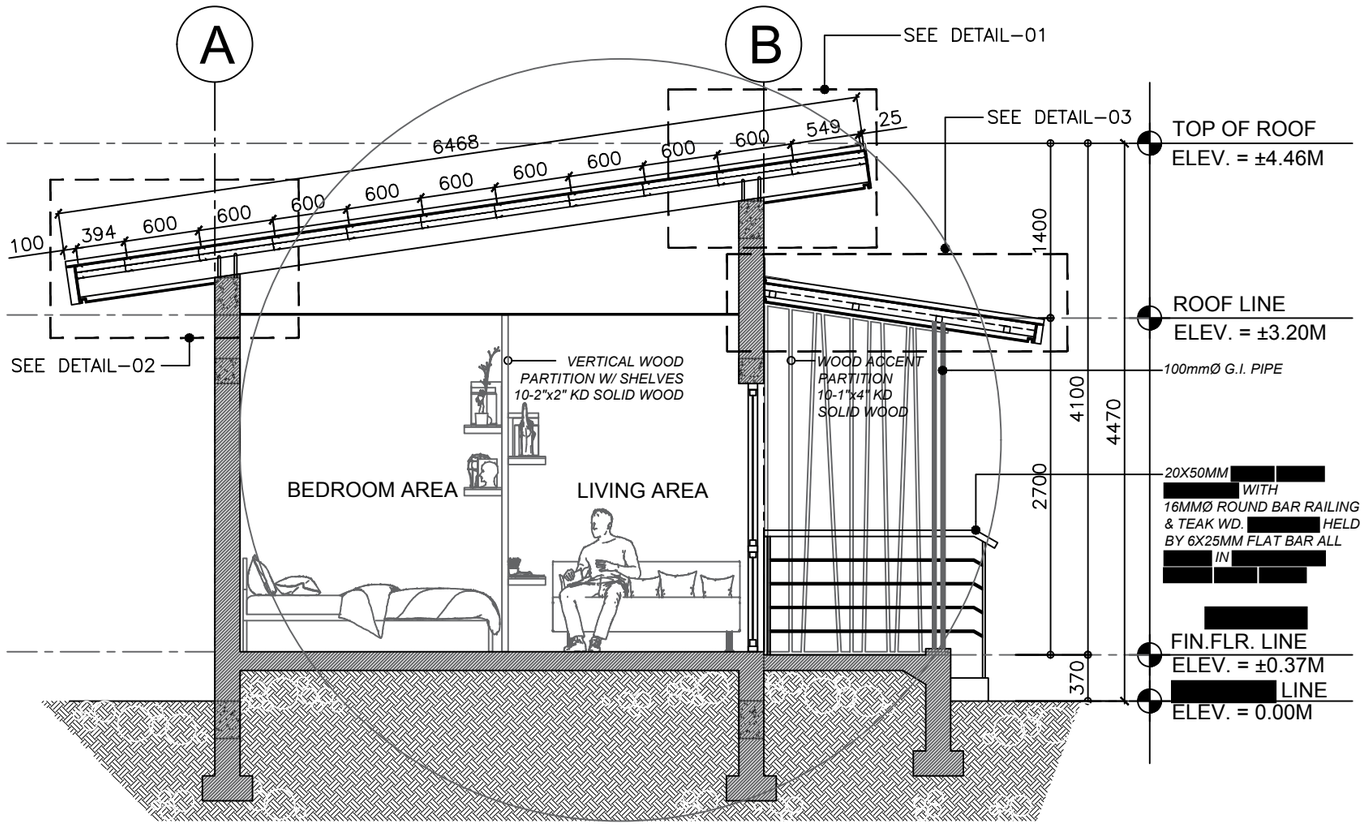

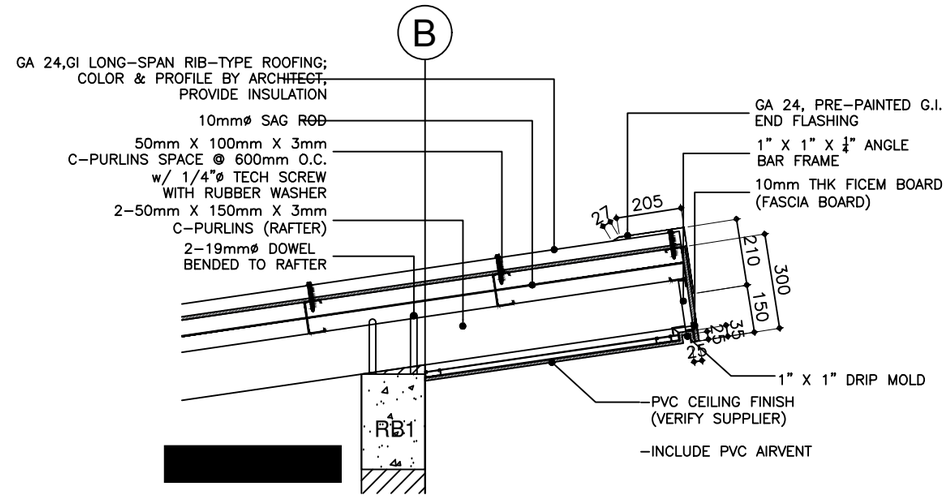

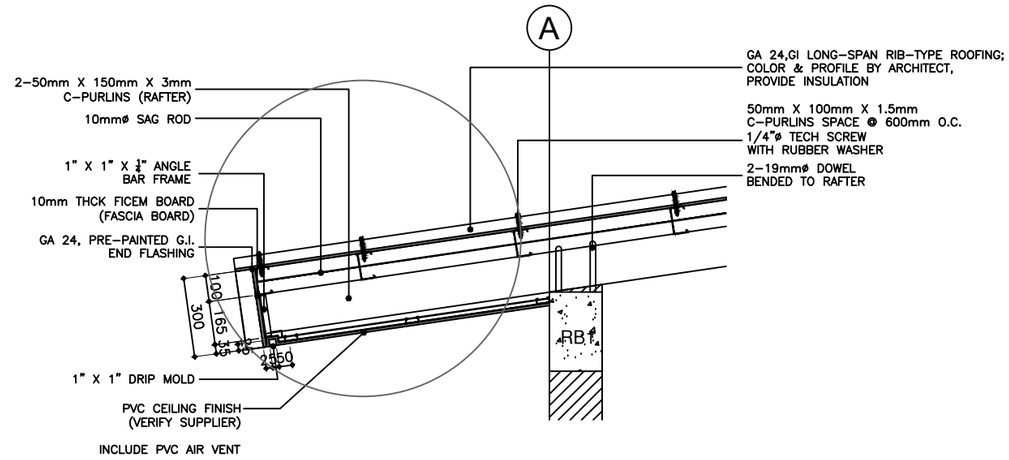

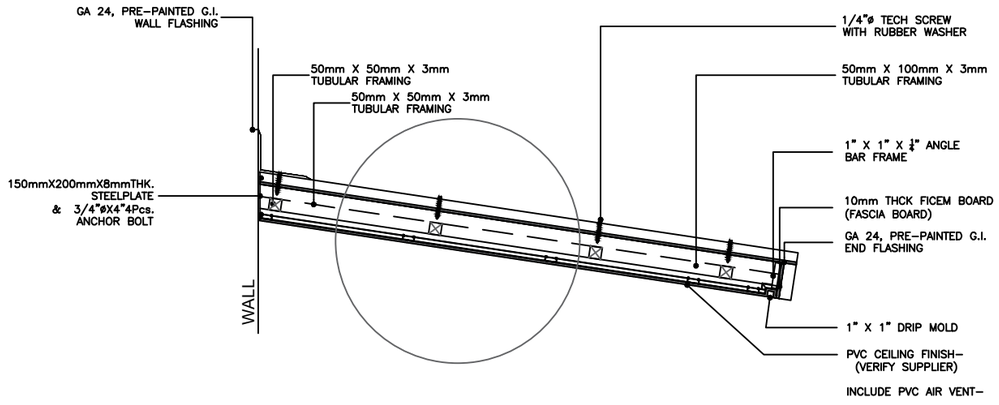

1 / S-200 **ROOF FRAMING DETAILS**

SCALE: NTS

REPUBLIC OF THE PHILIPPINES
DEPARTMENT OF SOCIAL WELFARE AND DEVELOPMENT
PRK. BUMANAAG, BRGY.ZONE III,
KORONADAL CITY, SOUTH COTABATO, FO XII

PREPARED BY:
ENGR. CRESSYL ANN E. BANTAYA
TECHNICAL FACILITATOR
CHECKED BY:
ENGR. FRANCIS C. ESTOMATA
PDO III

RA 9266 SECTION 33

Drawings and specifications and other contract documents duly signed, stamped or sealed, as instruments of service, are the intellectual property and documents of the architect, whether the object for which they are made is executed or not. It shall be unlawful for any person to duplicate or make copies of said documents for use in the repetition of and for other projects or buildings, whether executed partly or in whole, without the written consent of the architect or author of said documents.

[redacted] AND [redacted] BY:
[redacted]
EN[redacted]

[redacted] TITLE:
[redacted] OF 2-UNITS [redacted]
(11-ROOMS)
LOCATION:
RRCY, BRGY. [redacted] PAIT, TANTANGAN, SOUTH [redacted]

[redacted] BY:
[redacted] JOEL C. [redacted]
DSWD - [redacted] XII

[redacted]
ROOF FRAMING DETAILS

[redacted]

MARK	DATE

[redacted] NO.	
DRAWN BY :	CEB
DESIGNED BY :	
DATE :	--
CHECKED BY :	FCE

[redacted] NO.
S-200
SCALE A3 AS [redacted] A1